ECO NO.	DATE	REV.	REVISION RECORD	ANTH.	DR.BY
4631	7/7 99	A	REDESINGED WIRING DIAGRAM FOR TA-1 USING ALTERNATOR.		TSM
4694	9/22 00	B	REMOVED WIRE #6 AND CHANGED WIRE GAUGE TO CONFORM WITH HARNESS. CHANGED TITLE FROM TA TO 6A. ADDED 10A.		TSM

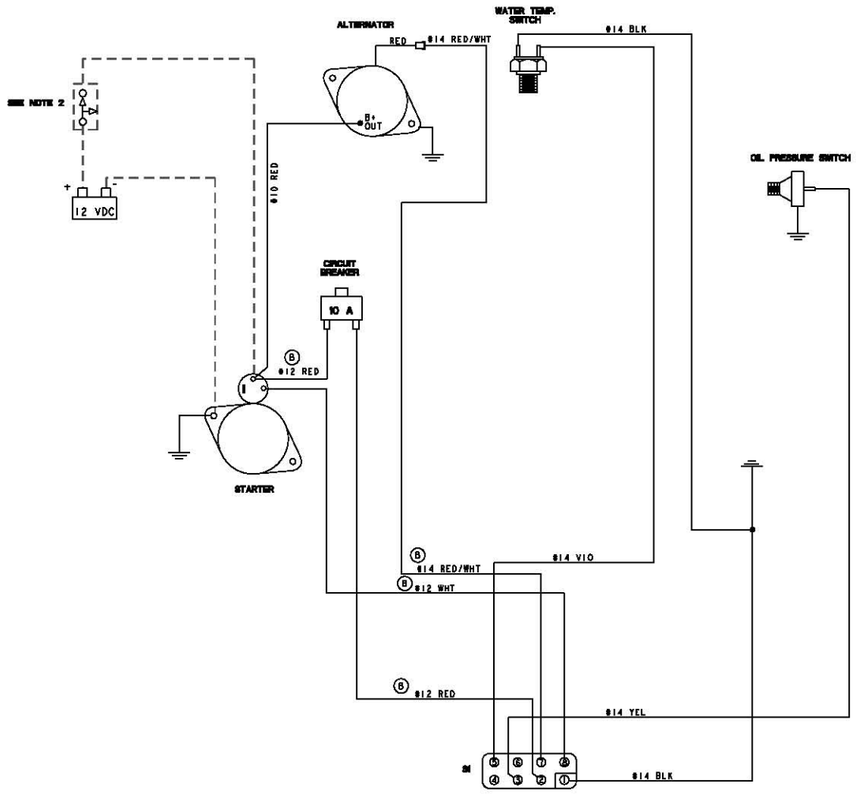

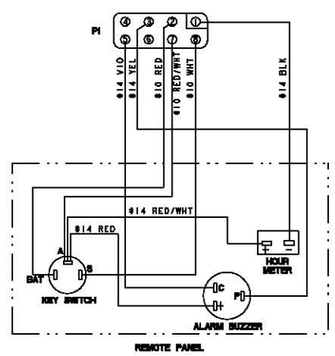

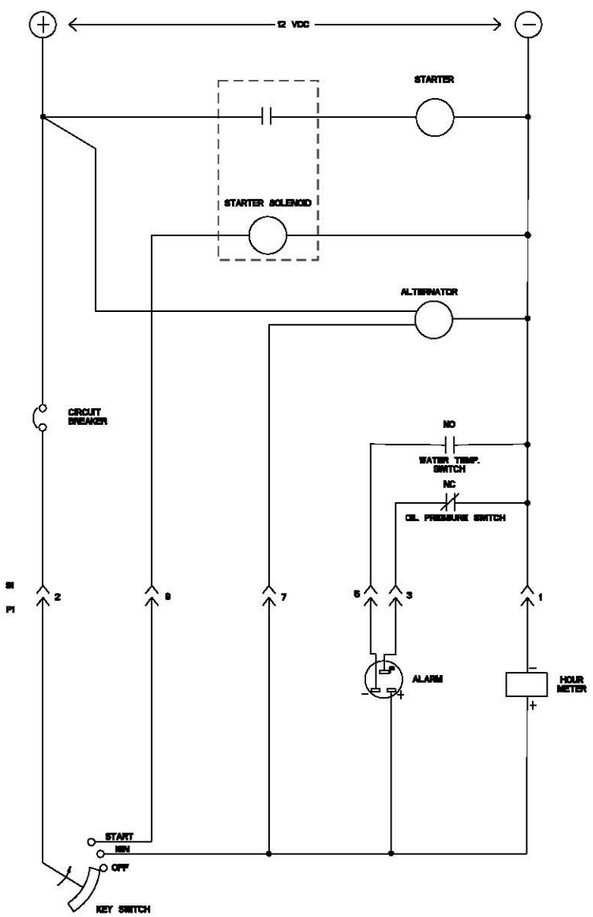

NOTES:
1. THIS PRODUCT IS PROTECTED BY A MANUAL RESET CIRCUIT BREAKER LOCATED NEAR THE STARTER. EXCESSIVE CURRENT WILL CAUSE THE BREAKER TO TRIP AND THE ENGINE WILL SHUT DOWN. THE BUILDER/OWNER MUST BE SURE THAT THE INSTRUMENT PANEL, WIRING, AND ENGINE ARE INSTALLED TO PREVENT CONTACT BETWEEN ELECTRICAL DEVICES AND SEAWATER.

2. AN ON-OFF SWITCH SHOULD BE INSTALLED BETWEEN THE BATTERY AND STARTER TO DISCONNECT THE BATTERY IN AN EMERGENCY AND WHEN LEAVING THE BOAT. A SWITCH WITH A CONTINUOUS RATING OF 175 AMPS. AT 12 VDC WILL SERVE THIS FUNCTION. THIS SWITCH SHOULD NOT BE USED TO MAKE OR BREAK THE CIRCUIT.

TOLERANCES (UNLESS OTHERWISE NOTED)	WESTERBEKE CORPORATION AVON MA. 02322		
INCHES .XX ±.02 .XXX ±.005 ANG. ±.5° FINISH 63	MILLIMETERS X.X ±.5 X.XX ±.25	TITLE WIRING DIAGRAM/SCHEMATIC 6A-1, 10A-1 PROPULSION ENGINE (A)	
DIMENSIONS <INCHES> [MILLIMETERS]		DRAWN BY CSU / DATE 12/20/99	MATERIAL:
		APPROVED BY / DATE	
		SCALE NONE	SIZE E / DRAWING NUMBER 44542 / REV. B
		SHT. 1 OF 1	